NIAGARA

SKU: DVP4470

DVI LIGHTING

CATEGORY: OUTDOOR FLUSH MOUNT

Traditional outdoor flush mount in hammered black with glass shade. Two light outdoor flush mount provides lighting. Bulbs not included. No chain included. No pipe included. Uses Standard bulbs. ADA Approved. Rated for wet locations. Manufacturer guarantees 5 year warranty from date of purchase.

FIXTURE SPECIFICATIONS

Length / Ø: 12"
Width: N/A
Depth: N/A
Height: 7.75"
Minimum Height: N/A
Maximum Height: N/A
Damp Location Certified: Yes
Wet Location Certified: Yes

LAMPING

Number of Bulbs: 2
Max Bulb Wattage: 40W
Socket Type: Medium Base
Recommended Bulb: E26/ST19 Clear Edison LED
Bulbs Included: No

FINISH OPTIONS

HB

GLASS OPTIONS

CL

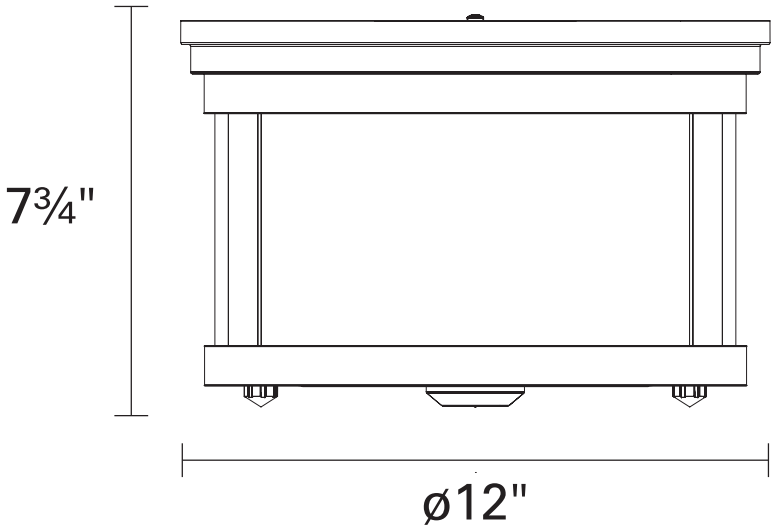

RELATED SKUS

DVP4477	DVP4471
DVP4470	DVP4410
DVP4432	DVP4475
DVP4472	DVP4411

WARRANTY

5 Years

ADDITIONAL INFORMATION

No chain included. No pipe included.

120 Great Gulf Drive, Concord, ON L4K 5W1
+1 855 384 5483 | +1 855 384 8453
customerservice@dvi.lighting
www.dvcanada.com